SITE PLAN OF
415,LLC
SITUATE AT
MONTAUK
TOWN OF EAST HAMPTON
SUFFOLK COUNTY, NEW YORK
S.C.T.M. DIST. 0300 SEC. 11 BLK. 05 LOT 25

10 5 0 10 20 30 40 50 60 70 80 90
SCALE: 1" = 20'
DATE: JANUARY 4, 2013

LOT AREA: 18,205 SQ.FT. = 0.418 ACRE
ELEVATIONS HEREON REFER TO APPROX. MSL DATUM
AND ARE THE RESULT OF ACTUAL FIELD MEASUREMENTS

NO SURFACE WATER WITHIN 300' OF SITE
NO WELLS WITHIN 150' FROM ALL PROPERTY LINES

SITE ADDRESS 415 WEST LAKE DRIVE, MONTAUK, N.Y.

NO UNDERGROUND STORAGE OR OIL TANKS

SCHOOL DISTRICT: MONTAUK
FIRE DISTRICT: MONTAUK
ZONING DISTRICT: RS

FLOOD ZONE BOUNDARY AS SCALED FROM THE F.E.M.A.
FLOOD INSURANCE RATE MAP.
MAP NO. 36103C0254 H - EFFECTIVE DATE: SEPTEMBER 25, 2009

ALLOWABLE LOT COVERAGE:2,731 SQ.FT. = 15%
EXISTING: 986 SQ.FT.
PROPOSED: 1,653 SQ.FT. = 9.1%

ALLOWABLE TOTAL LOT COVERAGE: 13,654 SQ.FT. = 75%
EXISTING: 3,210 SQ.FT. = 17.6%
PROPOSED ADDITIONAL: 1,679 SQ.FT.
PROPOSED TOTAL: 4,889 SQ.FT. = 26.9%

ALLOWABLE CLEARING: 10,999 SQ.FT. OR 75% WHICHEVER IS GREATER: 13,654 SQ.FT.
PARCEL 100% CLEARED EXCEPT A FEW REMAINING LARGE TREES

ALL CLEARED AREAS OTHER THAN BUILDINGS AND DRIVEWAYS
TO BE STABILIZED WITH GRASS

PARKING CALCULATIONS:

MULTIPLE RESIDENCE

REQUIRED PARKING: 2 PER UNIT

2 UNITS X 2 = 4 TOTAL SPACES

SEE SEPARATE ENGINEERING PLAN FOR SANITARY DESIGN & DETAILS

CERTIFIED TO: SEAN MURPHY
415, LLC

JOB NO.: 2011-196 L25
MAP NO.:
FILED:
REVISIONS:
ADD PROP. C.E. 10/8/18
REV. PARKING, REV LC CALC'S 11/8/18
REV. SITE PLAN, ADD ENGINEERED DRAINAGE
& PROP. SAN.SYS. 12/31/18
REV. SITE PLAN 3/7/19
REV. ENGINEERED DRAINAGE & PROP.
SAN. SYS. 3/26/19

LICENSE NO.: 050363

HANDS ON SURVEYING
26 SILVER BROOK DRIVE
FLANDERS, NEW YORK
11901
TEL: (631)-369-8312 - FAX:(631)-369-8313
MARTIN D. HAND L.S

COPIES OF THIS SURVEY MAP, EITHER PAPER OR ELECTRONIC, NOT BEARING THE LAND SURVEYORS INKED SEAL OR EMBOSSED SEAL SHALL NOT BE CONSIDERED TO BE A VALID COPY AND SHALL NOT BE USED FOR ANY PURPOSE.

KEY MAP

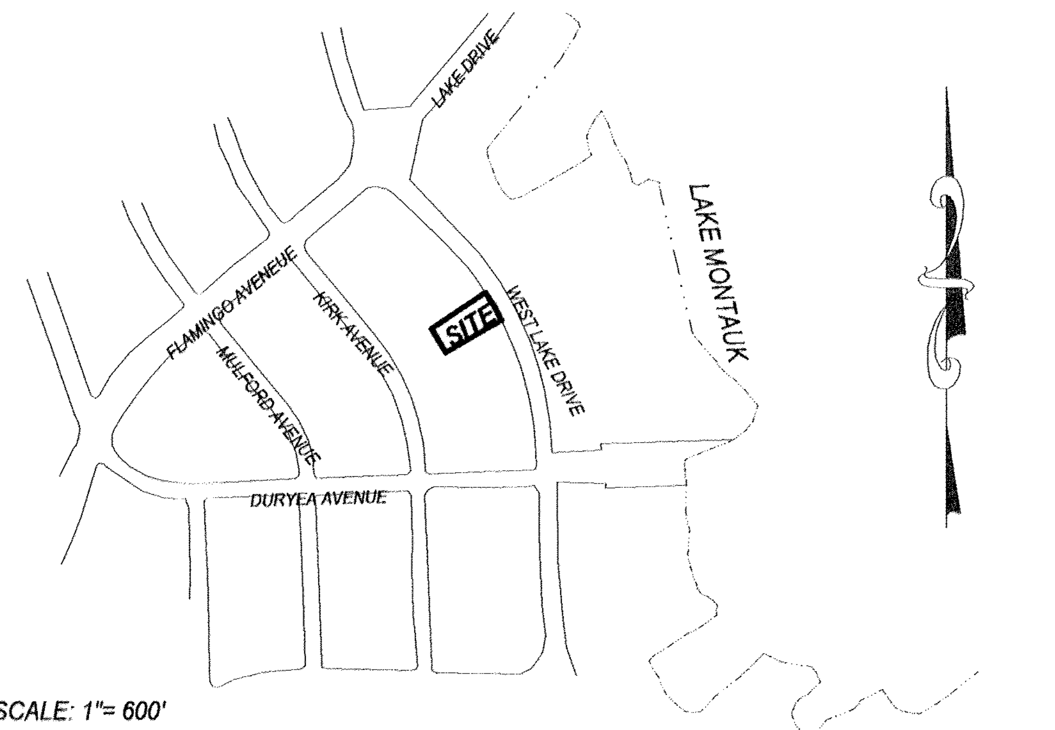

SCALE: 1"= 600'
10 5 0 10 20 30 40 50 60 70

TRENCH DRAIN DETAIL

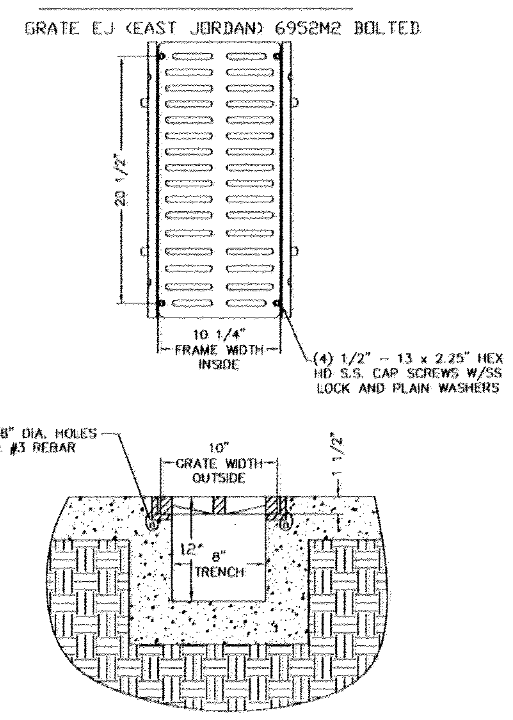

DRAINAGE CALCULATIONS:

ROOF DRAINAGE
ROOF AREA UNIT A = 1,418 S.F. x 1.00 x 0.17 = 241 C.F.
REQUIRED = 241 C.F./42.24 V.F. = 5.7 FT
PROVIDE = (2) - 8' DIA. x 3' EFF. DEPTH POOLS = 253 V.F.

ROOF DRAINAGE
ROOF AREA UNIT B = 685 S.F. x 1.00 x 0.17 = 117 C.F.
REQUIRED = 117 C.F./42.24 V.F. = 2.8 FT
PROVIDE = (2) - 8' DIA. x 2' EFF. DEPTH POOLS = 169 V.F.

DRIVEWAY DRAINAGE
GRAVEL DRIVEWAY 618 S.F. x 0.5 x 0.17 = 52.5 C.F.
ASPHALT DRIVEWAY 1,163 S.F. x 1 x 0.17 = 198 C.F.
REQUIRED = 251 C.F./42.24 V.F. =5.9 V.F.
PROVIDE = (1) -8 DIA. x 6' EFF. DEPTH POOLS =253 V.F.

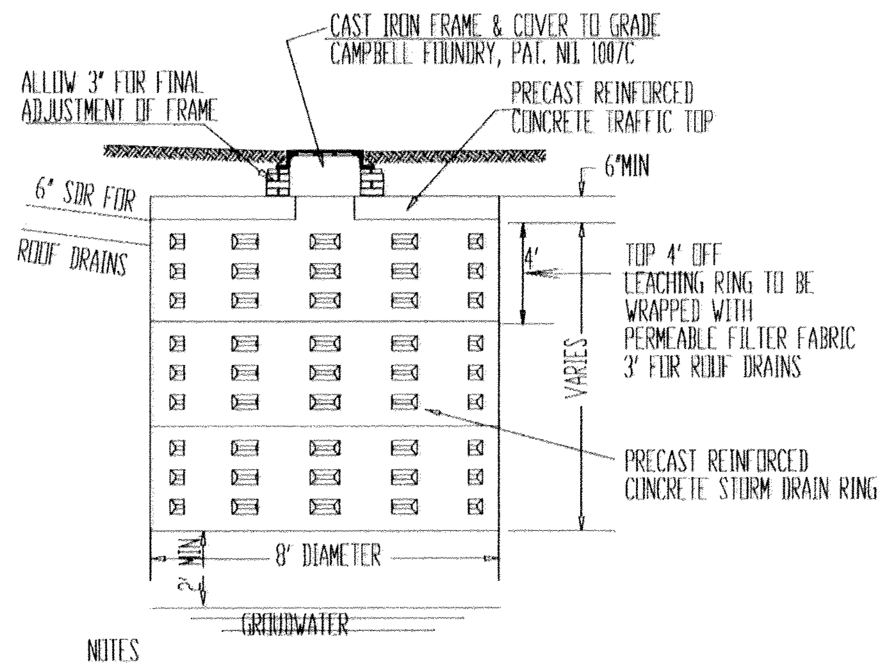

NOTES
1. CONCRETE - 4000 PSI AT 28 DAYS
2. ALL DRAINAGE COMPONENTS TO BE TRAFFIC RATED IN PAVED AREAS
3. ALL DRAIN RINGS SHALL BE 2' MIN. ABOVE GROUNDWATER
4. STORM DRAINS SHALL NOT BE COMBINED WITH ROOF DRAINS
5. GRATE AND TRAFFIC TOP TO BE USED IN DRIVEWAY
6. 6" THICK TOP TO BE USED IN GRASS AREAS
7. DRAINAGE STRUCTURES TO BE 10' FROM WATER LINES

STORMWATER DRYWELL

TEST HOLE DATA

	EL:14.0'
MIXED SAND & LOAM	
	-2.0'
BROWN CLAYEY SAND (SC)	
	-13.6' EL:0.4'
WATER IN BROWN CLAYEY SAND (SC)	
	-15.0'
WATER IN BROWN FINE TO COARSE SAND W/ GRAVEL (SW)	
	-23.0'

TEST HOLE BORING BY
McDONALD GEOSCIENCE
12/12/2018
WATER ENCOUNTERED 13.6'
BELOW SURFACE

O LF - DENOTES HIGH HAT LIGHT FIXTURE
SEE DETAILS TO BE PROVIDED BY OTHERS

10 EXISTING CONTOUR

-10- PROPOSED CONTOUR

EASEMENT AND/OR SUBSURFACE STRUCTURES RECORDED OR UNRECORDED ARE NOT GUARANTEED UNLESS PHYSICALLY EVIDENT AT THE TIME OF SURVEY.

THE OFFSET (OR DIMENSIONS) SHOWN HEREON FROM THE STRUCTURES TO THE PROPERTY LINES ARE FOR A SPECIFIC PURPOSE AND USE AND THEREFORE ARE NOT INTENDED TO GUIDE THE ERECTION OF FENCES, RETAINING WALLS, POOLS, PATIOS, PLANTING AREAS, ADDITIONS TO BUILDINGS AND ANY OTHER CONSTRUCTION.

UNAUTHORIZED ALTERATION OR ADDITION TO THIS SURVEY IS A VIOLATION OF SECTION 7209 OF THE NEW YORK STATE EDUCATION LAW.

COPIES OF THIS SURVEY MAP NOT BEARING THE LAND SURVEYORS INKED SEAL OR EMBOSSED SEAL SHALL NOT BE CONSIDERED TO BE A VALID TITLE COPY.

CERTIFICATIONS INDICATED HERON SHALL RUN ONLY TO THE PERSON(S) FOR WHOM THE SURVEY IS PREPARED AND ON HIS BEHALF TO THE TITLE COMPANY, GOVERNMENTAL AGENCY AND LENDING INSTITUTION LISTED HEREON, AND TO THE ASSIGNEES OF THE LENDING INSTITUTION. CERTIFICATIONS ARE NOT TRANSFERABLE TO ADDITIONAL INSTITUTIONS OR SUBSEQUENT OWNERS.

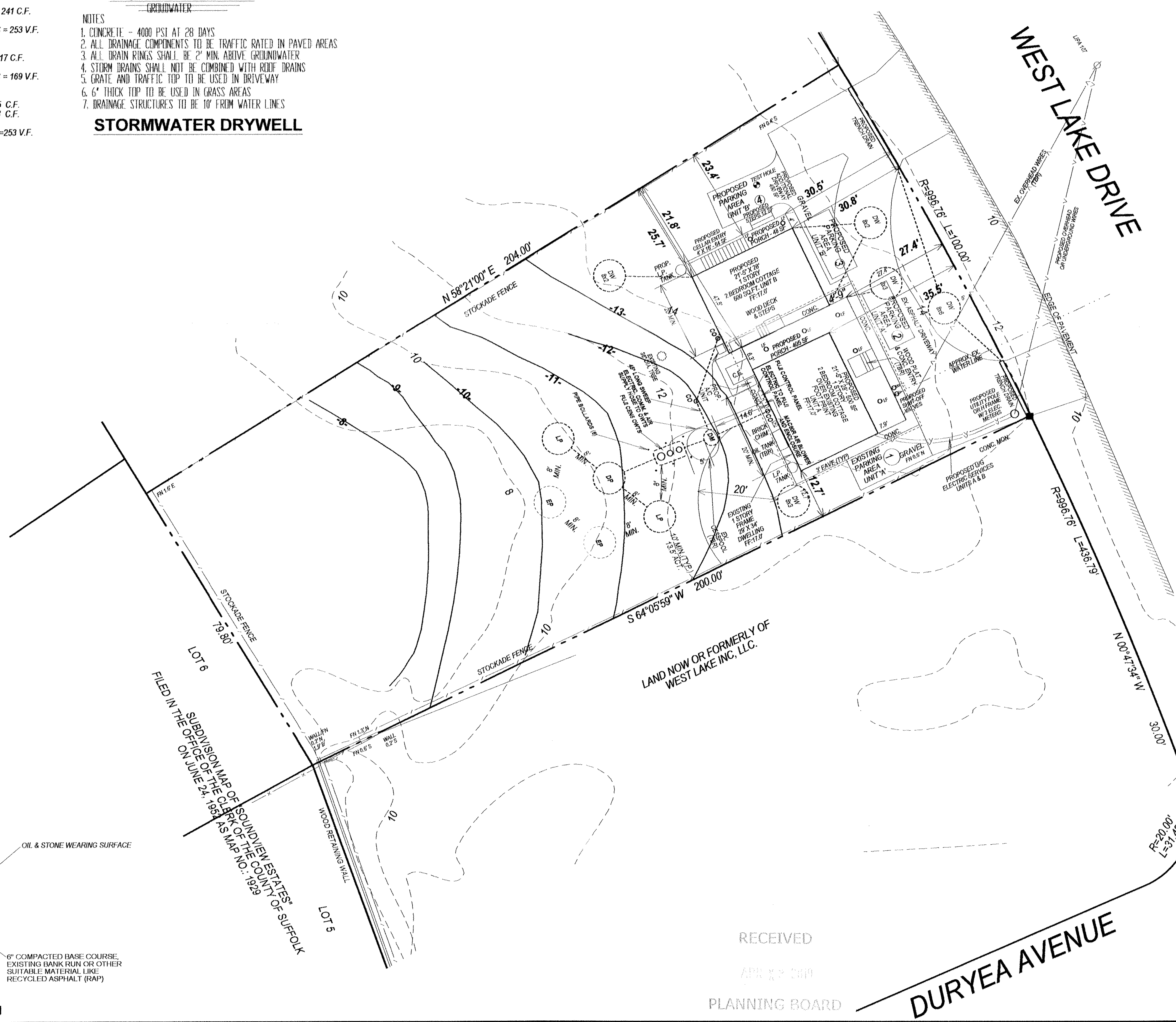

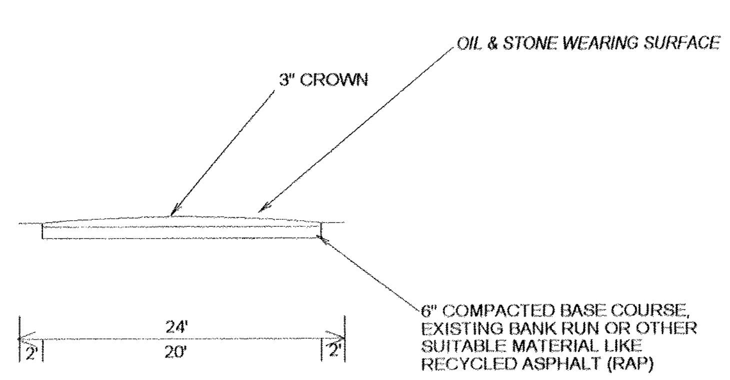

DRIVEWAY CROSS SECTION

RECEIVED
APR 2? 2019
PLANNING BOARD