Burial Depth and its Relationship to Predation, Growth and Behavior in Early Post-Set Hard Clams, Mercenaria mercenaria

A Thesis presented

by

Craig Keith Hassler

to

The Graduate School

in Partial Fulfillment of the Requirements

for the Degree of

Master of Science

in

Marine Environmental Sciences

State University of New York

at

Stony Brook

May, 2002

State University of New York
at Stony Brook

The Graduate School

Craig Keith Hassler

We, the thesis committee for the above candidate for the

Master of Science degree,

hereby recommend acceptance of this thesis.

Robert M. Cerrato, Project Advisor
Associate Professor of Marine Sciences
Marine Sciences Research Center

Glenn R. Lopez, Project Reader
Professor of Marine Sciences
Marine Sciences Research Center

Anne McElroy, Project Reader
Associate Professor of Marine Sciences
Marine Sciences Research Center

This thesis is accepted by the Graduate School.

Dean of the Graduate School

Abstract of the thesis

Burial Depth and its Relationship to Predation, Growth and Behavior in

Early Post-Set Hard Clams, Mercenaria mercenaria

by

Craig Keith Hassler

Master of Science

in

Marine Environmental Sciences

State University of New York

at

Stony Brook

2002

The relationship of burial depth to predation, growth and behavior of early post-set hard clams, *Mercenaria mercenaria*, was tested in laboratory experiments using three size classes (1 mm, 3 mm, and 5 mm, valve length) of animals and three burial depths (0, 1, and 3 body lengths). Mud crab, *Panopeus herbstii*, predation rates were highest on small and medium clams and decreased as burial depth increased. Predation rates on large clams were the lowest of the three size classes tested, and did not change with burial depth. Growth was assessed by maintaining clams at treatment depths for a two week period. Growth decreased with increased burial depth, and the effect of depth on growth decreased with increasing size. Clams from all size classes at the shallowest burial depth, and a surface control, had the highest relative growth rates

ranging from 15.5% to 27.3% per day. Clams in the deepest burial treatment had the lowest rates ranging from - 4.3% to 5.8% in small and large clams respectively. Small clam growth was the most affected by burial depth. Large clam growth was the least affected by burial depth. Clams did not respond by withdrawing their siphons to water-borne odors prepared from predators, crushed clams, or a seawater control. Although siphon to valve length ratios decreased with increased valve size, relatively long siphons do not appear to be an anti-predator adaptation. When not restricted from burrowing with a predator present, clams chose to burrow and therefore sacrificed some growth for enhanced survival. This study demonstrates that predation and growth exert opposing pressures on plantigrade hard clam burial depth. An intermediate strategy balancing these counteracting factors appears to be more successful than optimizing or maximizing one of them.

TABLE OF CONTENTS

		Page
	ABSTRACT	iii
	LIST OF FIGURES	vi
	LIST OF TABLES	vii
	ACKNOWLEDGMENTS	viii
I	INTRODUCTION	1
II	MATERIALS AND METHODS	9
	A. Predation experiment	9
	B. Growth experiment	10
	C. Response to water borne odors	11
	D. Siphon to valve ratios	12
	E. Burial depth experiment	13
	F. Data analysis	14
III	RESULTS	15
	A. Predation experiment	15
	B. Growth experiment	15
	C. Response to water borne odors	16
	D. Siphon to valve ratios	16
	E. Burial depth experiment	16
IV	DISCUSSION	18
V	SUMMARY	24
	REFERENCES	41

LIST OF FIGURES

Figure Page

1. Growth chamber.....25

2. Overview of the experimental arrangement for the growth experiment.....26

3. Mud crab predation rates 27

4. Relative growth rates per day 28

5. Ratio of siphon to valve lengths 29

6. Averaged burial depths 30

LIST OF TABLES

Table Page

1. Predation experiments: mean valve lengths and sediment depths tested.....31

2. Growth experiment: mean valve lengths and sediment depths tested 32

3. Response to water-borne odors experiment: mean valve lengths and odors tested 33

4. Odor source, soaking time, volume of water and weight of animals used in preparation of odor sources 34

5. Burial depth experiments: mean valve lengths.....35

6. Predation rates (clams consumed per hour) on three size classes in three burial treatments.....36

7. Growth of three size classes in three burial treatments.....37

8. Siphon response to water-borne odors.....38

9. Valve lengths: range, mean, standard error and siphon to valve ratio of three size classes.....39

10. Burial depths of three clam size classes with predators present, absent, and in a control treatment.....40

ACKNOWLEDGEMENTS

The path a man makes in his life both shapes and reflects him. This thesis is the culmination of six years of my path as a part-time graduate student at Marine Sciences Research Center and a full-time employee at the East Hampton Town Shellfish Hatchery.

I am gratefully indebted to my mentor and advisor, Bob Cerrato, and my friend, and colleague, John Aldred, for their steady supply of encouragement, insight, flexibility, and patience. My readers, Ann McElroy and Glenn Lopez have added valuable criticisms and technical suggestions to this work.

I would also like to thank those who have helped with one or more aspects of this project including: Marty Burns and Merri Zaleski at Islip Town Hatchery, Sandy Dumais, Mike Patriccio, and Gregg Rivara at Suffolk County Marine and Environmental Learning Center, Tim Hogan, Amy Larson, Frank Quevedo, Gary Seff, Rob Stuart, and friends and family who took the time to question me about this work, listened to my answers, and gave thoughtful suggestions. Thank you to the East Hampton Town Board members who approved my use of Hatchery facilities for this research.

This work is dedicated, with love, to my parents, Jane Page and Edward Gutshall Hassler

I. INTRODUCTION

Mercenaria mercenaria have been commercially harvested in New England since the 1800s. Following a decline in the oyster industry, which was severely impacted by increased pollution, poaching and the 1938 hurricane (Boyd 1990, Kassner 1985), the hard clam fishery became an economic force in this region after the 1930s. Clam harvests reached a zenith in the 1960s and 1970s in Rhode Island and New York, respectively. Since the 1980s, landings from both states have decreased (Boyd 1990, Koppelman and Davies 1987). The exact cause of recent declines is unclear. Overfishing, illegal harvesting, reduced spawning stock from uncertified areas due to transplanting programs, spawning failure, loss of harvest areas due to pollution, dredging, within specific estuaries, altering circulation patterns, and persistent blooms of *Aureococcus anophagefferens*, starting in the mid-1980s are suspected (Kassner 1985).

Management of hard clam resources has intensified in response to declining harvests. Of the three principal management practices: increasing stock size, controlling harvest pressure, and insuring sanitary harvest for public health (Kassner 1985), the first is most readily employed by townships on Long Island. A variety of strategies have evolved to increase stock size including: establishment of spawner sanctuaries, seed planting, predator control, and habitat modification. Twelve of thirteen townships plant juvenile hard clams as part of their shellfish management programs (Barnes 2001). At present, successful outcomes from clam seedings are highly variable. Survival rates after the first winter can range from less than 1% to 80% (Rivara and Aldred 2001, Aldred et al. 2001) depending on the method and location of seeding and protection from predation. The observations presented in this thesis have ecological importance due to their emphasis on a life-history phase of hard clams about which little information exists.

Hopefully, these observations will add to the understanding of factors that impact early post-set hard clam growth and survival and aid fisheries managers in augmenting hard clam populations.

Hard clams inhabit diverse substrates including homogeneous sediments of fine-grained muds, sands, small pebbles or shell beds as well as heterogeneous bottoms where shell debris is interspersed with mud or sand, or where seagrass beds and associated rhizomes and roots are anchored in mud or sand (Pratt 1953, Wilson 1990). Heterogeneous bottoms, especially muddy or sandy sediments containing shell hash support the highest abundances of hard clams (Pratt 1953, Walker and Tenore 1984, Kassner et al. 1990). As might be expected for species with limited mobility, investigations into the association of high clam abundance with particular substrates has centered on the importance of processes during and within the first year after settlement. Much of this work is focused on settling larvae or juveniles. The hypothesis that heterogeneous substrates provide an environment that promotes greatest clam settlement, growth and survival acknowledges the interdependence of a suite of biological, chemical, physical and geological factors and processes acting on these life stages.

Several studies have emphasized the role of larvae in establishing adult abundance patterns. This work suggests that larval recruitment patterns are the result of an interplay between the physical characteristics of the local environment, particularly flow regime and hydrodynamic roughness of the bottom, benthic community structure and behavioral adaptations of the settling larvae. Several of these studies have concluded that settlement is a passive process, in that larvae do not actively select a substrate. Bachelet et al. (1992) compared larval settlement in laboratory experiments conducted in

still water for four hours. They observed non-selective settlement into two different substrates: mud and glass beads of the same average grain size. Others have hypothesized that seagrass beds or shell debris protruding through the sediment surface produce a baffling effect, slowing local current velocities, and enhancing larval settlement (Eckman 1983, Wilson 1990, Peterson 1986). Laboratory research by Ahn et al. (1993a) indicated that larvae may actively select specific substrate characteristics during settlement. Compared to sand and mud treatments, increased settlement of hard clams was observed in aerated and recirculated waters with sand and muddy sand containing gem clams, *Gemma gemma*, in sediment which had been previously exposed to gem clams, and in sediment with empty gem clam shells. While the relative importance of active versus passive larval selection of substrate is not yet resolved, enhanced settlement into heterogeneous substrates occurs and represents a process which contributes to adult abundance patterns.

Growth and survival of hard clams during the first year after settlement are also important determinants of adult abundance patterns. For a period after settlement until they reach a shell length of approximately 9 mm, hard clams are called plantigrades (Carriker 1961). While smaller than 4 mm, they are asiphonate, but have a valvular membrane that acts as an exhalent siphon (Carriker 1961). Carriker (1961) suggested that plantigrade burial depth is limited by siphon length until 4 mm. Then a ring of tentacles has formed around the edge of the inhalant siphon, which can screen particles, allowing feeding from within the interstices of porous sediments. They occupy a niche in surface sediments by attaching to sediment particles with byssal threads. Carriker (1961) noted strongest adherence with byssal threads in plantigrades 0.5 to 1 mm in length, and

estimated that byssal attatchment continued in animals up to 7 mm. Byssal attachment is an important adaptation allowing plantigrades a stationary position in surface sediments where current conditions could otherwise resuspend and transport them (Carriker 1961).

Predation on clams within the first year after settlement is one of the most important processes influencing survival (Carriker 1961, MacKenzie 1977, Peterson 1986). Predators of hard clams include gastropod mollusks such as whelks, drills, and moon snails, echinoderms such as seastars, rays and fish including summer and winter flounder, northern puffer, and blackfish, birds including oyster catchers and gulls, and crustaceans such as crabs and shrimps (Beal 1983, MacKenzie 1977, Virnstein 1977). Crabs are the most detrimental hard clam predators (MacKenzie 1977). Several factors are observed to affect crab predation of bivalves including temperature (Whetstone and Eversole 1981), intra- and interspecific interactions among predators (Mansour and Lipcius 1991), predator size (Whetstone and Eversole 1981, Flagg and Malouf 1984), density and type of infauna (Larsen 2000, Muscaro and Seed 2000a, Mansour and Lipcius 1991, Eggleston 1990), juvenile selection of substrate (Larson 2000), valve shape (Boulding 1984), valve size (Arnold 1984, Beal 1983, Eggleston 1990, Muscaro and Seed 2000b, Seed 1980,Whetstone and Eversole 1981), burial depth (Blundon and Kennedy 1982), and bottom type (Arnold 1984, Irlandi 1994, Sponaugle and Lawton 1990). Crab predation on hard clams may be lower in heterogeneous habitats than in homogeneous bottoms.

Several studies examine the relationship between heterogeneous sediments and predator considerations such as foraging efficiency, substrate preference and faunal communities. Behavioral observations of *Callinectes sapidus* and *Ovalipes ocellatus*

preying on hard clams (15 to 20 mm valve length) indicated that crabs foraged less efficiently in sand/shell substrates than in sand or sand/gravel substrates (Sponaugle and Lawton 1990). Substrate preference experiments (Arnold 1984) found that blue crabs spent more time in sand, mud, and sand/mud substrates than in shell and gravel. Blue crab predation experiments (Arnold 1984) revealed highest clam consumption rates in mud and sand sediments, and lowest rates in shell and gravel. Larson (2000) suggested that infauna associated with shell hash substrates may provide alternative prey for predators thereby decreasing predation pressure on hard clams.

Bivalve predation research has led to the hypothesis of size refuge from predation.. Flagg and Malouf (1983) recorded field survival rates for three size classes of hard clams: (4 mm, 7 mm, and 29 mm shell lengths) of 4.0, 43.1, and 82.5% respectively. In laboratory and field experiments observing mud crab, *Panopeus* herbstii, predation on hard clams, Whetstone and Eversole (1981) found clams <20 mm, shell length, suffered the highest predation. Using lab experiments, MacKenzie (1977) demonstrated that as clams grow they become less vulnerable to a succession of predators, outgrowing mud crabs at a length of 7 mm, rock crabs at 15 mm, oyster drills at 20 mm, and moon snails at 50 mm.

Habitats having conditions that promote rapid growth of juveniles to a size refuge from most predators allow greater clam survival than habitats promoting slower clam growth. Substrate compostition/grain size can indicate relative magnitude of physical processes such as current speed. Heterogeneous bottoms containing pieces of shell, pebbles or small rocks near the sediment surface are exposed to greater and reduced current speeds, and therefore, greater flux of food allowing greater plantigrade growth

than homogeneous environments of smaller grain sizes. Pratt (1953) acknowledged the role of high current velocities, in shell areas, providing more food for clams, as another factor contributing to the distribution of hard clams.

The mere presence of predators; however, may slow plantigrade growth, and prolong the time required to reach a size refuge from predation. Studies testing the effect of siphon nipping by the pinfish, *Lagodon rhomboides*, on 16 to 19 mm (valve length) hard clams over six week caging experiments in the summer and fall found a small effect of browsing on siphon weight and valve length (Irlandi and Mehlich, 1996). While statistically significant, the researchers believed that the difference was not biologically significant. Another study, measuring nonlethal effects of predators on prey populations (Nakaoka 2000) observed lower growth rates in clams living in habitats with lower survivorship and higher predation rates, and concluded that predators affected clam growth rate. Although no mechanisms were suggested to explain the effect, burrowing activity and/or increased burial depth may reduce growth rate.

Burrowing has been deduced to reduce feeding in juvenile clams, although not specifically in response to predators. Lab experiments by Ahn et al. (1993b) evaluating the effects of a population of a small infaunal suspension-feeding bivalve, *Gemma gemma*, on emigration, growth and survival of recently set hard clams found that hard clams were forced to spend more time near the surface as they crawled to new areas and therefore spent more time feeding. Clams kept near the sediment surface, either due to sediment properties or interaction with competitors, grew considerably faster than undisturbed clams in sand and implied a negative interaction between feeding and burrowing. Burial as a factor mitigating predation on infaunal bivalves has been

demonstrated through several studies. Experiments observing blue crab, *Callinectes sapidus*, predation on *Mya arenaria* (Blundon and Kennedy, 1982) found that soft clams living deeper in the sediment were less efficiently eaten than those living nearer the sediment surface. Haddon, Wear, and Packer (1987) tested the predator protection capacity of burial depth by observing *Ovalipes catharus* predation on the bivalve *Paphies ventricosa*. Their work showed a significant decrease in predation at the deepest burial depths (26 cm) observed. Research observing siphon size and burial depth in deposit- and suspension-feeding benthic bivalves (Zwarts and Wanink 1989) determined that the risk of being taken by a predator decreases with burial depth.

Burial response of benthic bivalves to predators via burial depth has been examined in a few instances. Lee (1996) observed the spatial distribution of two infaunal bivalves, *Tapes philippinarum* and *Anomalocardia squamosa*. *A. squamosa* was found at more shallow burial depths and had a thicker shell than than *T. philippinarum*. Vertical distribution of the two bivalves did not significantly change in the presence of a predator, *Portunus pelagicus*, but mortality of *Tapes philippinarum* was greater than that of *Anomalocardia squamosa*, suggesting that shell thickness provided greater protection from predators than burial depth. Studies of large juvenile, and adult *Mercenaria mercenaria* demonstrated a burial response to predators and pressure. Tidally synchronized movements of 20 to 54 mm shell height hard clams were observed by Roberts et al. (1989). Deepest burial depths (25 mm) were observed at low tide and shallowest depths (5 mm) at high tide. They also noted that clams buried at depths less than 20 mm suffered greater gull, *Larus argentatus*, predation than clams buried at depths greater than 20 mm. Experiments testing the effect of pressure and predation on 25 to 38

mm valve length hard clams found that clams burrowed 5 to 15 mm deeper when exposed to barometric pressure drops (Revelas 1984).Clams held in aquaria containing the seastar, *Asterias forebsi*, burrowed 10 mm deeper into the substrate than control clams.

Studies of burrowing response to predators in plantigrades are scant. Plantigrades appear to actively seek sediment when not buried. Habitat selection in experiments with 3 mm shell length clams resulted in preferential selection of all substrates presented over treatments without sediment (Larson 2000). This thesis tests the hypothesis that growth and predation exert opposing pressures on early post-set hard clam burial depth. It also observes burial response to predators and discusses the role of siphon length as an anti-predator adaptation through observations of siphon to valve ratios, siphon response to water-borne odors and in relation to growth. These observations will help explain the role of early settlement juvenile hard clam burial behavior in balancing the pressures of growth and survival.

II. METHODS

Predation, growth, burial depth experiments and video analysis of valve to siphon ratios took place at the East Hampton Town Shellfish Hatchery, hatchery site, located on Fort Pond Bay, Montauk, New York. Responses to prepared odors were observed at the East Hampton Town Shellfish Hatchery, nursery site, located at Three Mile Harbor, East Hampton, NY. Sediment used in all experiments was obtained from Lake Montauk and Three Mile Harbor, East Hampton. Mud and fine-sand were obtained by wet sieving sediment. Mud was the fraction less than 63 μm, and fine-sand was the fraction greater than 63 μm to less than 120 μm. Islip Town Hatchery provided clams for predation and growth experiments. Clams used in video analysis of siphon to valve ratios, and response to water-borne odors came from the East Hampton Town Hatchery. Aquacultural Research Corporation, Dennis, Massachusetts, supplied clams for the burial depth experiments.

A. Predation Experiment

Predation rates of mud crabs, *Panopeus herbstii*, on three sizes of clams in three sediment depth treatments were observed in late Summer 1999. 20 male mud crabs, measuring 13.4 mm to 22.1 mm (average 17.8 mm) across the widest part of the carapace were collected from Three Mile Harbor, East Hampton and conditioned in separate compartments of a 100 l seawater table (120 cm long, 60 cm wide, and 7.5 cm deep) filled with unfiltered seawater. Water flow across the seawater table averaged 3 l/ min. During the experimental period, water temperature ranged from 19 to 23 °C. Crabs were conditioned for the experiment by a daily feeding of one clam (valve lengths ranged from 1 to 5 mm) for two weeks prior to the experiment. Crabs that consumed the previous

daily clam ration were used in predation trials.

Predation trials consisted of placing one crab into a 300 ml Pyrex ™ bowl (10 cm diameter 5 cm deep) submerged in the seawater table. Each bowl contained 20 clams from one size class, buried by 0, 1, or 3 body lengths under a layer of mud. See Table 1 for clam sizes and burial depths. After 45 to 240 minutes, each crab was removed from its bowl; these times were based on preliminary feeding-rate trials. Predation rates were calculated by counting the number of clams consumed and dividing by the time the crabs were deployed. Predation trials on all clam sizes were observed twice between 22 August and 13 September 1999. Five replicate bowls were used for 1 and 3 mm clams in both trials. Four replicate bowls were used for 5 mm clams in both trials. The number of replicates depended on the availability of consistently feeding crabs.

B. Growth Experiment

Growth rates of three sizes of juvenile post-set clams, at three depths below the sediment surface, were observed and compared for a two-week period from 21 June to 4 July 2000. Growth chambers used in this experiment were made from 75 mm diameter PVC pipe and Nitex ™ screen. An illustration of the growth chamber is provided in Figure 1. The bottom of the chamber consisted of 100 μm mesh Nitex ™ screen. The chamber was filled with mud to a depth of 20 mm, and a 500 μm mesh Nitex ™ screen was fixed in place on top of the sediment. 10 clams and a 5 mm thick layer of sediment were placed on the screen. A second layer of screen (500 μm mesh) was then placed on top. Depth treatments consisted of varying the depths of sediment above the upper screen in each chamber. Table 2 lists the average valve length, and initial ash free dry weights of clams used, and the sediment depths tested.

To determine if the upper-most screen affected growth, all size classes of clams were observed in chambers without an upper screen, hereafter referred to as the control. Five replicates were prepared for each treatment. A total of 60 chambers with 45 devoted to clam size/sediment depth combinations and 15 testing clams in control chambers were located in a rectangular tank (335 cm long, 66 cm wide and 60 cm deep) using a randomized block design. The tank was filled with 750 l of 1 μm filtered, ambient temperature, seawater and aerated. 100% of seawater was exchanged daily by draining the tank and adding new water. During the growth trial, water temperatures ranged from 19 to 24 °C. Three species of algae, *Thalassiosira weisfloggi*, *Isochrysis galbana*, and *Pavlova lutheri*, were drip fed into the tank after the water change at approximately 13,000 cells/ml over a twelve hour period, for the diatoms, and 32,000 cells/ml for each of the flagellates. See Figure 2 for an overview of the experimental arrangement

To measure growth, ash free dry weights (AFDW) of 30 clams sampled from each size class at the beginning of the experiment, and AFDW of clams in each treatment at the end of the experiment were determined. Relative percent clam growth was calculated by subtracting the beginning weight from the end weight, dividing by the initial weight, multiplying by 100 percent and dividing by 14 days. Ash free dry weights were calculated by weighing clams dried for 125 hours at 70 °C , and subtracting the weight of ash remaining after combustion for 3.5 hours at 500 °C.

C. Clam Response to Water-Borne Odors

Responses of three sizes of juvenile hard clams to three prepared odors and a control of 1 μm filtered sea water were observed on 22 July 2001. See Table 3 for mean valve lengths and odors tested. Clams were allowed to burrow into sediment in a flow-

through sea water table for one week prior to the odor trial. On the day of the experiment, clams were placed into 40 ml glass dishes (6 cm diameter, 2 cm deep) containing fine-sand to a depth of 1 cm and filled with 1 μm filtered seawater Three clams were placed into each dish, and dishes were submerged in a static flow seawater table. Five replicate dishes were prepared for each size class/odor combination. No individual was tested more than once with any odor.

Odors tested were prepared by soaking target species in 1 μm filtered seawater for 8 to 24 hours and decanting the water. Odors tested are displayed in Table 4 along with soaking times, volume of filtered seawater and weight of animals used. Each dish was removed from the static seawater bath and observed using a 7X to 30X dissecting microscope. Once buried, clams were located by observation of siphons protruding through the sediment surface. 10 ml of seawater was withdrawn from the dish using a pipet. A 10 ml sample of odor water was pipetted into the dish and clam response evaluated. Siphon activity was used as the measure of clam response categorized as siphons extended, no response, or siphons retracted.

D. Video Analysis of Siphon and Valve Lengths

Hard clams were videotaped on 20 June and 7 July 2001 at the East Hampton Town Shellfish Hatchery, hatchery site, in Montauk, NY using a FlexCam ™ video Camera attatched to a 7X to 30X dissecting microscope. Siphon and valve lengths were measured from the videotape. Siphon to valve ratios were determined for clams comparable to size classes used in predation, growth and burial experiments.

E. Burial Depth Experiment

Burial depth of three sizes of hard clams in three treatments: with predators present, absent and a control, were observed in mid-March 2002. Clams were kept in sediment for seven days prior to the experiment. Clams were held in chambers made of polybutyrate core tubing (7 cm diameter, 5 cm deep), closed on the bottom by 3 mm thick Plexiglas ™ and filled to a depth of 4 cm with mud. See Table 5 for average valve lengths of clams observed. Chambers were randomly deployed into 25 l tanks filled with 1 μm filtered seawater. Water temperature was maintained at 18-19 ° C. 75% of seawater was exchanged daily by draining the tanks and adding new water. *Thalassiosira weisfloggi*, *Isochrysis galbana*, and *Pavlova lutheri* were batch fed into the treatments every twelve hours, producing an initial concentration of approximately 2,800 cells/ml of the diatoms, and 3,000 cells/ml of each of the flagellates. Feeding ration was based on cell counts of the algae in culture.

Burial depth trials consisted of placing five clams in each chamber and allowing them to crawl and burrow for 12 to 14 hours. A 7 mm mesh Vexar ™ bag (48 cm long, 22 cm wide, 8 cm high) containing ten mud crabs, *Panopeus herbstii*, was placed on top of the chambers in one tank. A Vexar ™ bag containing no crabs was placed on chambers in a second tank, and no bag or crabs were placed on chambers in the control tank. Bags were removed after 24 hours. Burial depth was determined by extruding sediment and clams from each chamber at 1.6 mm intervals.

F. Data Analysis

Data were analyzed by ANOVA. Heterogeneity of variances was tested by log ANOVA (Scheffe – Box) test (Sokal and Rohlf 1998). If necessary, data were transformed to meet the heterogeneity assumption.

III. RESULTS

A. Predation Experiment

Predation rate decreased with burial depth for the small and medium clams; a change in predation rate with depth was not observed for the large clams. Predation rates on the three clam sizes in all burial treatments tested are listed in Table 6, and illustrated in Figure 3. A two way ANOVA of variates showed a significant effect of burial depth ($F(2,75) = 18.4$, $p < .0001$), clam size ($F(2,75) = 38.4$, $p < 0.0001$) and burial depth clam size interaction ($F(4,75) = 3.3$, $p = .014$). Among burial treatments, clams not buried by sediment suffered the highest predation rates (rate $\pm$ 1 std error) of 13.6 $\pm$ 1.4 clams/hr, clams buried by one body length of sediment the next highest predation rates of 11.3 $\pm$ 1.3 clams/hr and clams buried by three body lengths the lowest predation rates of 5.8 $\pm$ 1.0 clams/hr. Among size classes, small and medium clams experienced the highest predation rates of 13.0 $\pm$ 1.2 clams/hr and 13.1 $\pm$ 1.4 clams/ hr respectively, and large clams the lowest of 3.2 $\pm$ 0.4 clams/hr.

B. Growth Experiment

Relative growth rate decreased with increasing depth for all three clam sizes; however, the effect of burial depth on relative growth decreased with size. A two way ANOVA indicated a significant effect of burial depth ($F(3,48) = 12.5$, $p < .0001$) and size ($F(2,48) = 4.3$, $p < .019$). Growth for the size classes and burial depths tested is listed in Table 7, and illustrated in Figure 4. Clams in all three size classes in the control and surface treatments had the highest relative growth ranging from a low of 15.5% to a high of 27.3%. Small clams buried by 1 and 3 body lengths lost weight, and several died. Medium and large clams buried by 1 body length of sediment had relative

growth rates of 15.3% and 19.4% respectively, comparable to rates observed in control and surface treatments. Growth of large clams was least affected by increased burial depth.

C. Clam Response to Water-Borne Odors

There was no obvious short-term siphon response (Table 5) for clams exposed to water-borne odors. Less than 1% of clams responded to treatments. There was no trend with size or type of odor.

D. Video Analysis of Siphon and Valve Lengths

Siphon to valve ratio decreased with increasing valve size. Ranges, means, and standard errors of valve lengths and siphon to valve ratios are listed in Table 9. Small clams had a mean ratio ($\pm$ 1 std error) of $0.41 \pm .01$; medium clams a mean ratio of $0.35 \pm .01$; and large clams a ratio of $0.27 \pm .01$, see Figure 5. An ANOVA of variates showed a significant effect of clam size ($F(2) = 62.2$, $p < .0001$) on siphon to valve ratio.

E. Burial Depth Experiment

Clams in all three size classes buried to greater depth in response to the presence of crabs. A two way ANOVA of square root transformed variates indicated a significant effect of treatment ($F(2,126) = 13.3$, $p < .0001$) and size ($F(2,126) = 4.6$, $p < .01$). Planned comparisons of treatment effects showed that the two control treatments (no cage/no crab and cage/no crab) were not significantly different ($F(1, 126) = 0.857$, $p = 0.356$), and that treatments with crabs were significantly different from the controls

($F(1,126) = 25.74$, $p < .0001$). Medium clams appeared to have the greatest burial response. Planned comparisons of size effects indicated a significant difference between small and medium clams ($F(1,126) = 4.2$, $p = 0.041$), and medium and large clams ($F(1,126) = 8.959$, $p = 0.003$). The effect on small and large clams was not significantly different ($F(1,126) = 0.35$). Untransformed relative burial depths are listed in Table 10. Square root transformed variates and illustrated in Figure 6.

IV. DISCUSSION

Results of this study demonstrated a negative relationship between burial depth and growth and a positive relationship between burial depth and survival from crab predation. These results support the hypothesis that growth and survival from predators are opposing forces on early post-set hard clams. Furthermore, when clams were exposed to predators, they responded by burrowing, thus sacrificing some growth for enhanced survival. My results also demonstrated that the burrowing response was the lowest for small and large clams. For small clams this result reflects the large effect of burial depth on clam growth. Small clams may also not be as adapted for burrowing as medium and large clams. Carriker (1961) noted that asiphonate plantigrades were restricted to the surface sediments and that byssal attachment to sediment grains was strongest in animals 1.0 to 1.5 mm in length. For large clams this result reflects the decreased threat of predation on large clams. Large clams also showed the smallest effect of burial depth on growth.

Large clams in these experiments may have reached a size-refuge from mud crab predation thus explaining the consistently low predation rates in all burial treatments. Carriker (1961) observed that mud crabs can consume clams with lengths up to 30% of their carapace width. Mud crabs in the present study averaged 17.8 mm across the carapace. Theoretically, these crabs could consume clams up to 5.4 mm in length. Large clams in these experiments averaged 5.2 mm, the upper end of vulnerability to predation from these mud crabs.

Another possible explanation for reduced predation on large clams is that the crabs were satiated on the larger clams. Multiplying the size-specific initial average

AFDW from the growth experiment (Table 2) by the average predation rate of clams in treatments not buried by sediment (Table 6) indicates that crabs consumed 3.8 mg, 14.4 mg and 5.7 mg per hour of small, medium and large clam, respectively. Since medium clams were consumed to much greater amounts than large clams, crab satiation was not affecting predation rates of large clams.

My results also showed that burrowing response was greatest for medium clams, reflecting the increased threat of predation on medium clams. The effect of burial depth on medium clam growth was intermediate to the effect of burial depth on large and small clam growth. Size-selective feeding preference may account for highest predation of medium clams, and is consistent with other predator-prey preference studies. Mascaro and Seed (2000) found that *Carcinus maenus* fed *Mytilus edulis* and *Cerastoderma edule* selected an optimum size range of prey above and below which profitability (= dry flesh weight ingested per unit of handling time) decreased. Similar results were observed for *Carcinus maenus* feeding on *Mytilus edulis* by Elner and Hughes (1978). Size-selective feeding preferences have been demonstrated in snapping shrimp (*Alpheus heterochaelis* and *Alpheus normanni*) predation on juvenile hard clams (Beal 1983), and in *Carcinus maenus* predation on four bivalves (Mascaro and Seed 2000a,b).

Predation rates from data in Whetstone and Eversole (1981) yield mud crab predation rates of 1.7 mg wet weight per clam per hour which are considerably lower than predation rates calculated in my predation experiment. Mud crabs they observed were feeding on hard clams that were 40 to 75% of crab carapace width, and predation rates would be expected to be lower since their clams were larger than the size refuge suggested by Carriker (1961).

Siphon to valve length ratios, for clam sizes used in predation, growth and burial depth experiments, decreased with shell length. Siphon to valve length ratios noted by Carriker (1961) for comparable sizes are similar. Carriker (1961) recorded larger ratios in clams ranging from 0.5 to 1.5 mm in shell length than the present study. He noted that relative siphon length increased in clams from recently set animals (0.3 mm) up to 1 mm; then decreased in clams greater than 1.5 mm in shell length. Largest ratios were observed in clams 1.0 to 1.5 mm in shell length. Lowest ratios were recorded in 12 to 13 mm clams. Carriker (1961) suggested that plantigrade burial depth may be limited by siphon length until growth to approximately 4 mm, when a ring of tentacles on the inhalant siphon have formed and act as a screen to exclude sediment grains (Carriker 1961). The purpose of a longer exhalent siphon relative to the inhalant siphon in plantigrades is not clear. One potential explanation for a relatively longer inhalant siphon is that it may allow clams to live deeper in the sediments, increasing survival from predators without sacrificing growth. Studies by Zwarts and Wanink (1989) concluded that siphon length is one of the main factors determining burial depth and ultimately survival in deposit-and suspension- feeding benthic bivalves they observed. They suggested that burial depth can provide a refuge from predation. For the species they observed, burial depth, and siphon weight as a proportion of body weight increased with valve size up to about 50% of their maximum size.

Several observations argue against siphon length as an anti-predator adaptation in early post-set hard clams. Siphon to valve lengths decreased with increasing valve length. Small clams had the longest relative siphon length of the size classes observed and they were the most affected by burial in the growth experiment.

Conversely, large clams had the smallest siphon to valve length yet were the least affected by burial in growth experiments. No withdrawal of siphon when exposed to water-borne odors was observed. Clams burrowed rather than withdrew siphons in response to crabs in the burial depth experiment. A longer exhalent siphon relative to the inhalant siphon suggests that the role of siphon length in plantigrade hard clams is one of separating incoming food from outgoing waste (Carriker1961). Perhaps the valvular extension on the exhalent siphon allows wastes to be discharged above the boundary layer at a life history stage when food and waste separation is not yet possible through interstitial sediment water.

Large clam (4.7 mm mean valve length) growth was less affected by burial depth than smaller clams and supports Carriker's (1961) assertion that 4 mm animals are adapted for feeding through pore water, permitting burial depths deeper than siphon length. Mud was used in my growth experiment, and it is likely that sediment grain size affected the outcome of the experiment. As grain size decreases, the permeability of sediments decreases. Dissolved oxygen and food concentrations would decrease more rapidly with depth in fine-grained mud than in more coarse sediments of sand. Higher ammonia and sulfide concentrations would be expected at a more shallow depth horizon in mud than in sand. The use of more permeable sediments in the growth experiment may have decreased the effect of burial depth on growth. Burial response to predators may have also increased in more permeable sediments. Growth rates of clams in the deepest treatments would be expected to be greater in more coarse sediments than mud.

Understanding the function of juvenile developmental characteristics and behaviors in balancing the trade-offs between growth and survival is of particular

importance due to increased efforts to enhance hard clam stocks. Since predation is assumed to have the largest impact on seed survival (Kraeuter and Castagna 1985), and predation has been demonstrated to decrease with clam size (Whetstone and Eversole 1981) town-sponsored hard clam enhancement efforts focus on growing clams to as large a size as possible, in one growing season, before seeding. Some towns have gone a step further by overwintering a portion of their clams in shellfish growing bags in sediment or seeding then covering with screen to minimize predation (Aldred et al. 2001).

Consequences of growing clams to a large size before seeding include: increased cost per seed, decreased production due to biomass limitations of field gear used in growing juveniles at high densities, slower burial due to cooler water temperatures, and increased exposure to predators which are particularly abundant and voracious in the fall as they build reserves for winter. Experiments conducted in East Hampton Town (Aldred et al. 2001) compared overwinter survival of clams seeded with and without protection from predators, deployed in August and October. Highest survival rates were recorded for clams held in ¼" mesh bags in sediment and clams seeded into the bottom and covered with ¼" screen. In protected seedings small clams deployed earlier had greater survival than larger clams seeded later. No treatments were prepared to compare early and late seeded unprotected plantings.

Perhaps some aspect of growing hard clams in the water column and not in sediment, until mid-Fall could play a role in overwinter mortality. Length of time that clams are cultured without exposure to sediment may have a significant impact on burial rate. Preliminary observations of burial rates in 1, 3 and 5 mm clams previously exposed to sediment and clams naive to sediment undertaken as part of this thesis suggested that

previous exposure increases burial rate. Water temperatures at the time of seeding may also influence burial rate. Anecdotal observations of burial rates from East Hampton's overwinter trials in 1999-2000 indicated slower burial of 15 mm clams seeded in mid-October at 15 °C water temperatures than 12 mm clams seeded in late August at 20° C water temperatures. Perhaps a portion of the mortality incurred by seeded clams takes place as predation due to slow burial into sediments. Certainly this thesis indicates that clams respond to predators by burrowing more deeply once they are buried, and that burial does afford a measure of protection from predation. The strategy of dispersing smaller clams (8 to 12 mm shell length) earlier in the season at warmer water temperatures may be at least as successful as planting larger clams later, but have the added benefit, due to culture-capacity considerations, of allowing a greater number of animals to be seeded.

SUMMARY

1. Experiments demonstrated a negative relationship between burial depth and growth and a positive relationship between burial depth and survival from crab predation.

2. Clams responded to the threat of predation by burrowing thus sacrificing some growth for survival.

3. Burrowing response in large and small clams was least effected by the presence of mud crabs, *Panopeus herbstii*. Large clam burial response reflects a low threat from mud crab predation and a decreased effect of burial depth on growth. Burrowing response in small clams was affected by the large effect of burial on small clam growth. Small clams are not adapted for prolonged burial. Medium clam response was the most effected by the presence of mud crabs. Medium clam burial response reflects a high threat from mud crab predation, and a diminished effect of burial depth on growth

4. The ratio of siphon length to valve length decreased with increasing valve length. Small clams had the largest siphon to valve ratio, but were most affected by burial. Large clams had the smallest siphon to valve ratio and were least affected by burial. Hard clams did not respond to water-borne odors prepared from predators or crushed conspecifics. Siphon length does not appear to be playing an anti-predator role by allowing growth and survival at greater relative burial depth.

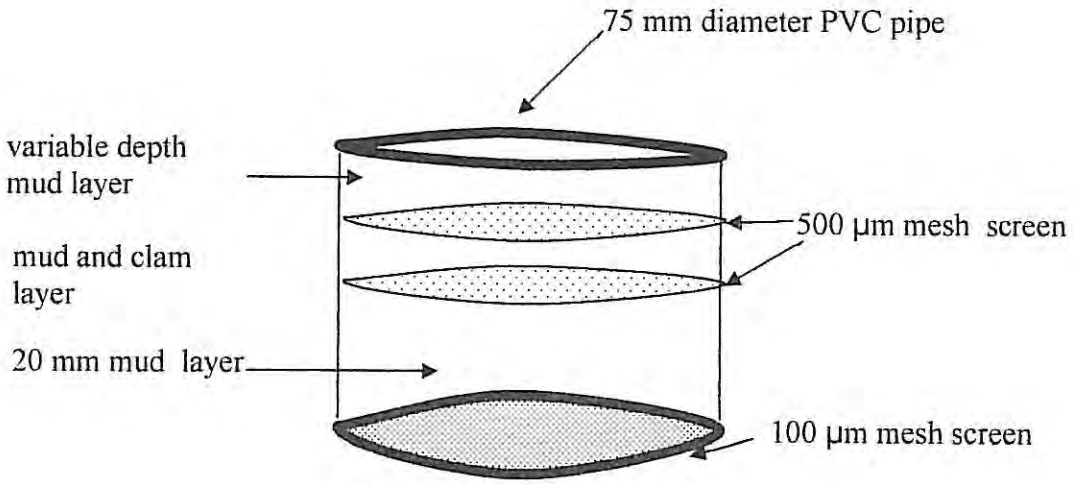

Figure 1: Growth chamber.

Figure 2: Overview of the experimental arrangement for the growth experiment.

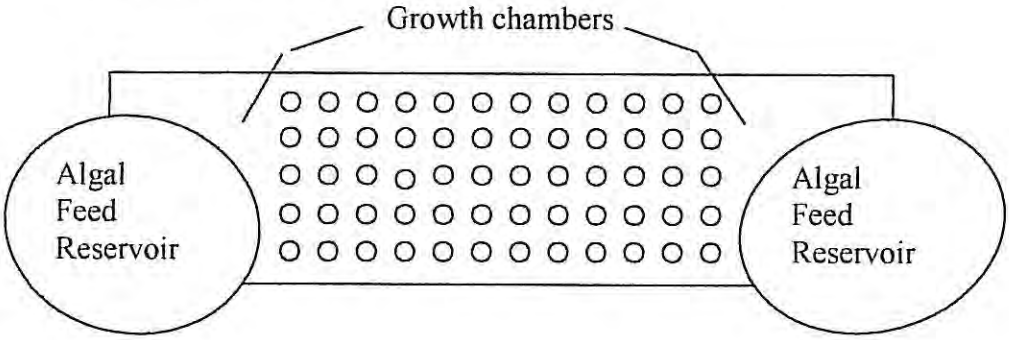

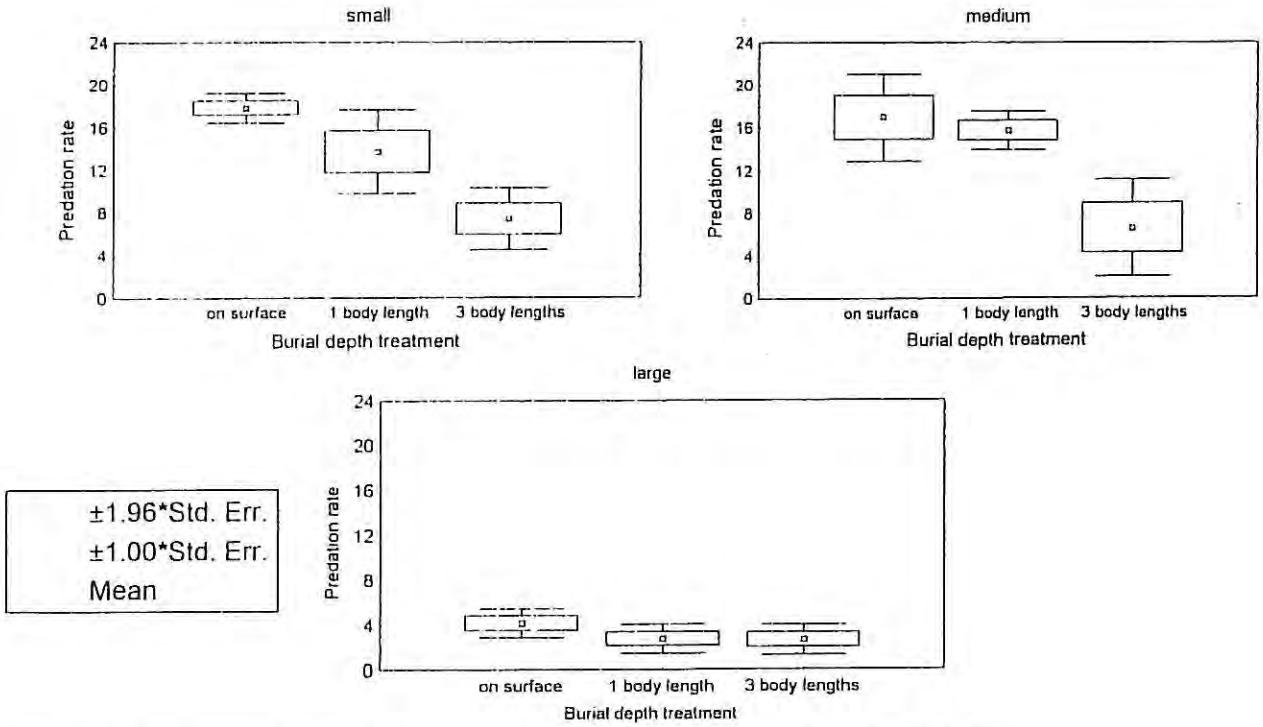

Figure 3. Mud crab predation rates (clams consumed per hour) on three sizes of plantigrades in three burial treatments.

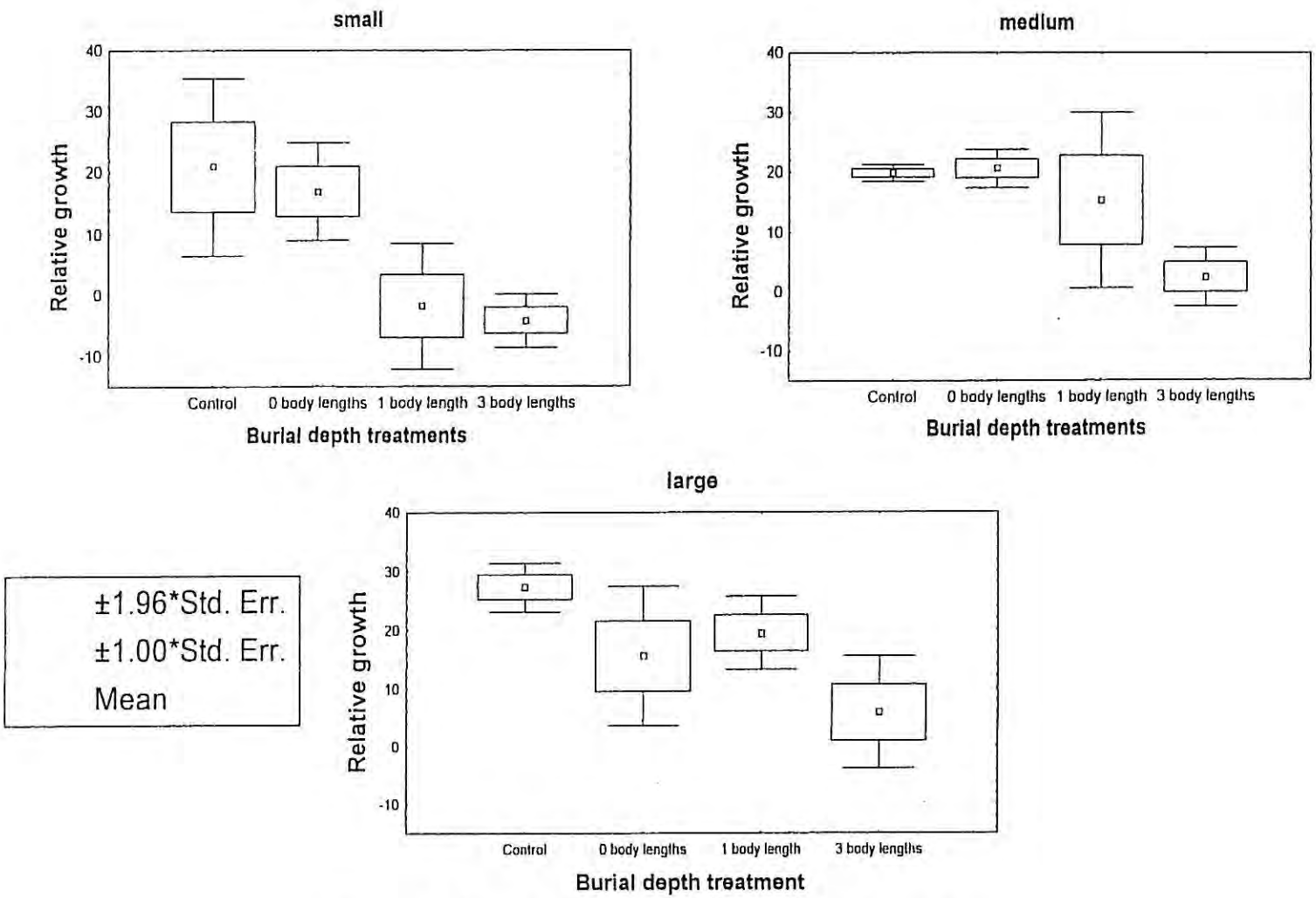

Figure 4. Relative growth (percent growth per day) of three sizes of plantigrades in a control and three burial depth treatments.

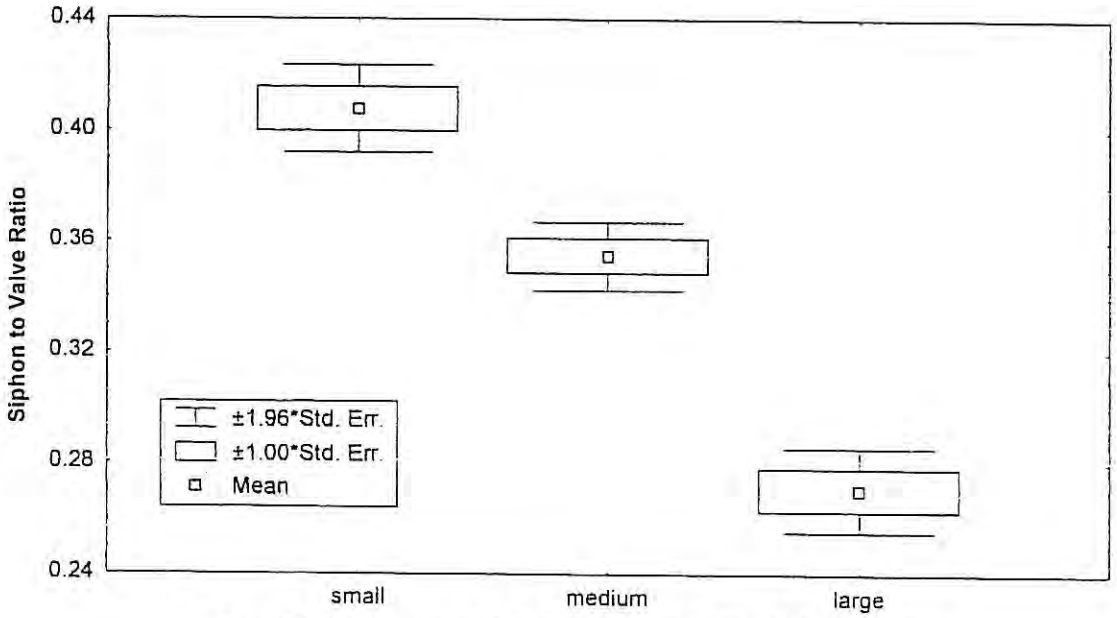

Figure 5. Mean siphon to valve ratios of the three sizes of plantigrades observed in Predation, Growth and Burial Depth Experiments.

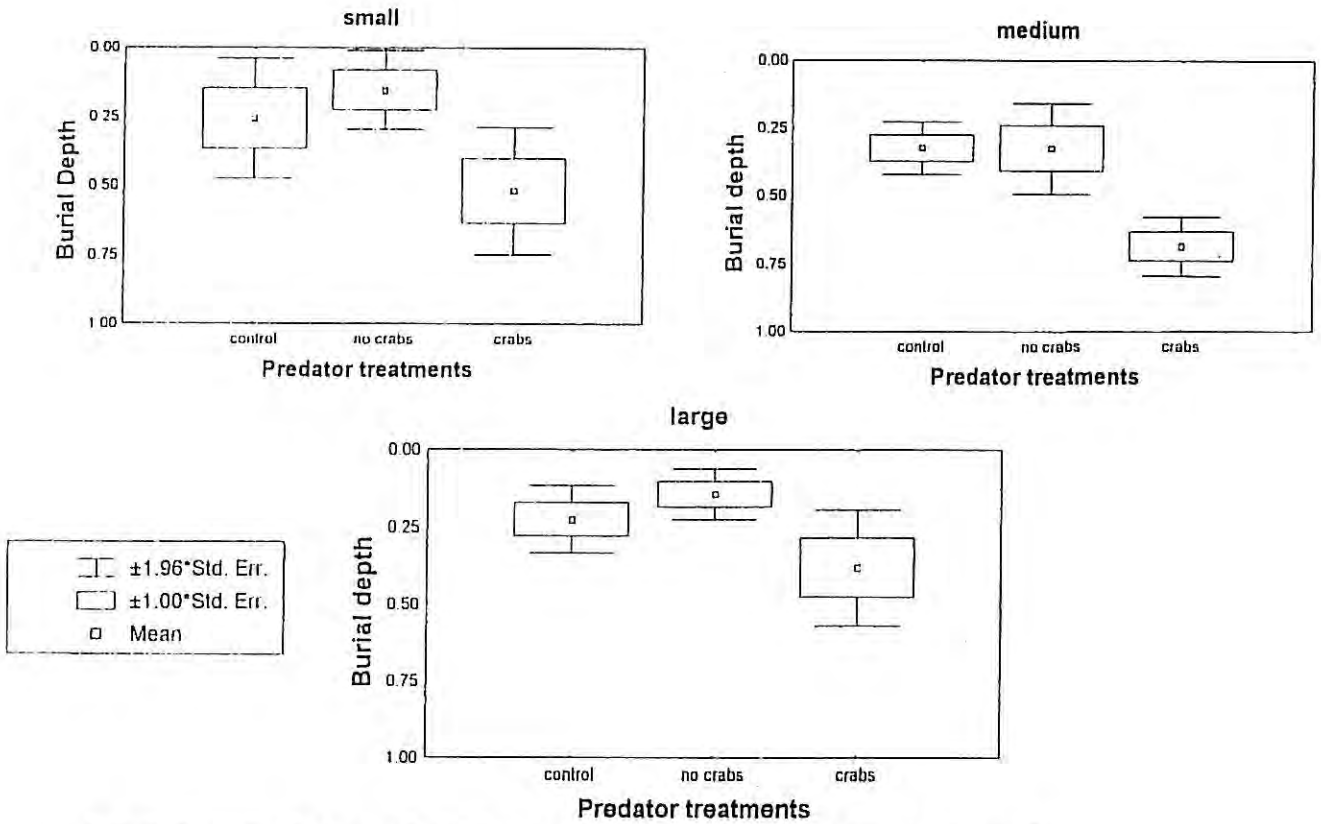

Figure 6. Averaged burial depth (body lengths, square root transformed) of three sizes of plantigrades in three treatments.

Table 1: Predation experiments: mean valve lengths of clams and sediment depths tested.

Clam Size Category	Valve Length ± std error (mm)	Burial Depth (mm)		
		0 body length	1 body length	3 body lengths
Small	1.29 ± .02	0	1	3
Medium	2.45 ± .05	0	3	9
Large	5.15 ± .03	0	5	15

Table 2: Growth experiment: initial ash free dry weight (AFDW), mean valve lengths of clams and sediment depths tested.

Clam Size Category	Initial AFDW ± std error (mg)	Valve Length ± std error (mm)	Sediment Depth above upper screen (mm)		
Small	0.21 ± .06	1.37 ± .03	0	1	3
Medium	0.85 ± .07	3.25 ± .04	0	3	9
Large	1.38 ± 0.2	4.73 ± .05	0	5	15

Table 3: Response to water-borne odors experiment: mean valve lengths and odors tested.

Odor Source	Valve lengths ± std error (mm)		
	Small	Medium	Large
Green crabs (*Carcinus maenus*)	1.47 ± .03	2.94 ± .03	5.09 ± .08
Mud crabs (*Panopeus herbstii*)	1.44 ± .03	2.95 ± .03	5.19 ± .08
Crushed Clams	1.53 ± .03	2.94 ± .03	5.15 ± .05
Filtered Seawater	1.56 ± .06	3.0 ± .05	5.16 ± .06

Table 4: Odor source, soaking time, volume of water and weight of animals used in preparation of odor sources.

Odor Source	Soaking Time (hours)	Volume Seawater (liters)	Wet Weight (grams)
Green crabs (*Carcinus maenus*) 8 crabs	26	6	366.3
Mud crabs (*Panopeus herbstii*) 13 crabs	26	6	14.5
Crushed clams (*Mercenaria mercenaria*) 35 clams	8	1	46.0
Seawater	0	1	0

Table 5: Burial depth experiments: mean valve lengths.

Clam Size Category	**Run**	**Valve Length ± std error (mm)**
Small	1	0.98 ± .02
	2	0.96 ± .02
	3	1.05 ± .02
Medium	1	2.55 ± .04
	2	2.68 ± .04
	3	2.64 ± .06
Large	1	4.58 ± .06
	2	4.78 ± .07
	3	4.62 + .06

Table 6: Predation rates (clams consumed per hour) on three clam sizes in three burial treatments.

Clam Size	**Burial Treatment** (predation rate ± 1 std. error)		
	Surface	1 body length	3 body lengths
Small	17.8 ± 0.7	13.7 ± 2.0	7.4 ± 1.5
Medium	17.0 ± 2.1	15.7 ± 0.9	6.6 ± 2.3
Large	4.1 ± 0.7	2.7 ± 0.7	2.6 ± 0.7

Table 7: Percent relative growth per day of three size classes in three burial treatments.

Clam Size	**Burial Treatment** Percent relative growth day [1] ± std error			
	Surface Control	0 body lengths	1 body length	3 body lengths
Small	20.9 ± 7.4	16.9 ± 4.0	-1.9 ± 5.3	-4.3 ± 2.2
Medium	19.9 ± 0.7	20.6 ± 1.6	15.3 ± 7.5	2.4 ± 2.5
Large	27.3 ± 2.1	15.5 ± 6.1	19.4 ± 3.2	5.8 ± 4.9

Table 8: Response to water borne odors.

Clam size	Odor	Response (percent/dish ± 1 std. error) Siphons Extended	No response	Siphons retracted
Small	MC	0	100	0
	GC	0	92	8*
	CC	0	100	0
	FSW	0	100	0
Medium	MC	0	100	0
	GC	0	100	0
	CC	0	100	0
	FSW	0	100	0
Large	MC	0	100	0
	GC	0	100	0
	CC	0	100	0
	FSW	0	100	0

MC – mud crab
GC – green crab
CC - crushed clams
FSW- filtered sea water

*1 clam on surface responded to odor by burrowing.

Table 9: Ranges, means, and standard errors of valve lengths and siphon to valve ratios.

Valve Lengths (mm)	**Small**	**Medium**	**Large**
Range	0.5 to 1.5	2.5 to 3.5	4.5 to 5.5
Mean	**1.05**	**2.8**	**4.9**
1 std. error	.02	.02	.03
1.96 std. error	.04	.04	.06
Siphon to Valve Ratios			
Mean	**0.41**	**0.35**	**0.27**
1 std. error	.01	.01	.01
1.96 std. error	.02	.02	.02

Table 10: Burial depths of three clam size classes in three treatments.

Clam size	**Treatment** Burial depth (body lengths ± 1 std. error)		
	Crabs	**No crab**	**Control**
Small	0.46 ± 0.14	0.10 ± 0.05	0.24 ± 0.13
Medium	0.51 ± 0.08	0.21 ± 0.07	0.14 ± 0.04
Large	0.28 ± 0.11	0.05 ± 0.02	0.10 ± 0.04

REFERENCES

Ahn, I.Y., R. Malouf, and G Lopez. 1993a. Enhanced larval settlement of the hard clam *Mercenaria mercenaria* by the gem clam *Gemma gemma*. Mar. Ecol. Prog. Ser. 99: 51- 59.

Ahn, I.Y., G. Lopez, and R. Malouf. 1993b. Effects of the gem clam *Gemma gemma* on early post-settlement emigration, growth and survival of the hard clam *Mercenaria mercenaria*. Mar. Ecol. Prog. Ser. 99: 61- 70.

Aldred, J., C. Hassler, F. Quevedo, C. Zarnoch, J. Dockstader. 2001. Hard clam extended culture trials 1999-2000. East Hampton Town. 36 pp.

Aldred, J. and G. Rivara. 2001. A comparison of machine planting hard clams versus hand planting in the Peconic Estuary: Development of strategies to maximize survival of hatchery reared seed. Final Report Peconic Estuary Program Action Plan Demonstration Project *Clam Planting Strategies*.

Arnold, W.S. 1984. The effects of prey size, predator size and sediment composition on the rate of predation of the blue crab *Callinectes sapidus* Rathburn, on the hard clam, *Mercenaria mercenaria* (Linne). J. Exp. Mar. Biol. Ecol. 80: (3) 207 -219.

Bachelet, G., C.A. Butman, C.M. Webb, V.R. Starczak, and P.V.R. Snelgrove. 1992. Non-selective settlement of *Mercenaria mercenaria* (L.) larvae in short-term, still-water, laboratory experiments. J. Exp. Mar. Biol. Ecol. 161: 241- 280.

Barnes, D. 2001. Personal communication.

Beal, B.F. 1983. Predation of juveniles of the hard clam *Mercenaria mercenaria* (Linne) by the snapping shrimp *Alpheus heterochaelis* Say and *Alpheus nornmanni* Kingsley. J. Shellfish Res. 3(1): 1 – 9.

Blundon, J.A. and V.S. Kennedy. 1982. Refuges for infaunal bivalves from Blue Crab, *Callinectes sapidus* (Rathbun), predation in Chesapeake Bay. J. Exp. Mar. Biol. Ecol. 65: (1) 67 -81.

Blundon, J.A. and V.S. Kennedy. 1982. Mechanical and behavioral aspects of Blue Crab, *Callinectes sapidus* (Rathbun), predation on Chesapeake Bay bivalves. J. Exp. Mar. Biol. Ecol. 65: (1) 47 -65.

Boulding, E.G. 1984. Crab-resistent features of burrowing bivalves: decreasing vulnerability by increasing handling time. J. Exp. Mar. Biol. Ecol. 76: (3) 201-223.

Carriker, M.R. 1961. Interrelation of functional morphology, behavior and autecology in early stages of the bivalve *Mercenaria mercenaria*. J. Elisha Mitchell Sci. Soc. 77(2): 168 - 241.

Eckman, J.E. 1983. Hydrodynamic processes affecting benthic recruitment. Limnol. Oceanogr.28 (2): 241 – 257.

Eggleston, D. B. 1990. Foraging behavior of the blue crab, *Callinectes sapidus*, on uvenile oysters, *Crassostrea virginica*, effects of prey density and size. Bulletin of Marine Science 46: (1) 62 -82.

Flagg, P.J., and R.E. Malouf. 1983. Experimental plantings of juveniles of the hard clam *Mercenaria mercenaria* (Linne) in the waters of Long Island, New York. J. Shellfish Res. 3 (1): 19 – 27.

Haddon, M., R.G. Wear, and H.A. Packer. 1987. Depth and density of burial by the bivalve *Paphies ventricosa* as refuges from predation by the crab *Ovalipes catharus*. Mar. Biol. 94: 25-30.

Irlandi, E.A. 1984. Large scale and small-scale effects of habitat structure on rates of predation - How percent coverage of sea grass affects rates of predation and siphon nipping on an infaunal bivalve. Oecologia 98;(2) 176 - 183.

Irlandi, E.A. , Mehlich, M.E. 1996. The effect of tissue cropping and disturbance by browsing fishes on growth of two species of suspension-feeding bivalves. J. Exp. Mar. Biol. Ecol. 197: (2) 279 - 293.

Kassner, J. 1985. The Great South Bay hard clam fishery a historical perspective. In *Suffolk County's Hard Clam Industry: An Overview and an Analysis of Management Alternatives*. Coastal Ocean Science and Management Alternatives (COSMA) Program. Marine Sciences Research Center, State Univ. NY. Special Report 63, Reference 95-19: V2 – V8.

Kassner, J., R. Cerrato, and T. Carrano. 1990. Understanding and improving the abundance of Quahogs (*Mercenaria mercenaria*) in the eastern Great South Bay, New York. In Proceedings of the First Rhode Island Shellfisheries Conference.Contribution #2646 of the College of Resource Development, The University of Rhode Island. 69 – 77.

Larson, A.A. 2000. The role of substrate type in characterizing the community parameters and the distribution of *Mercenaria mercenaria* (L.) in Great South Bay, New York. State Univ. NY at Stony Brook M.S. Thesis. 89 pp.

Lee, S.Y. 1996. Distribution pattern and interaction of two infaunal bivalves, *Tapes philippinarum* (Adams and Reeve) and *Anomalocardia squamosa* (Linnaeus) (Bivalvia: Veneridae). J. Exp. Mar. Biol. Ecol. 201: (1-2) 253-273.

MacKenzie, C.L.,Jr. 1977. Predation on hard clam (*Mercenaria mercenaria*) populations. Trans. Am.Fish. Soc. 106: 530 – 537.

Mansour, R.A., and R.N. Lipcius. 1991. Density-dependent foraging and mutual interference in blue crabs preying upon infaunal clams. Mar. Ecol. Prog. Ser. 72: 239 – 246.

Mascaro M., and R. Seed. 2000a. Foraging behavior of *Carcinus maenas* (L.): Comparisons of size-selective predation on four species of bivalve prey. J. Shellfish Res. 19(1): 283 –291.

Mascaro M., and R. Seed. 2000b. Foraging behavior of *Carcinus maenas* (L.): Species-selective predation among four bivalve prey. J. Shellfish Res. 19(1): 293 –300.

Nakaoka, M. 2000. Nonlethal effects of predators on prey populations: predator-mediated change in bivalve growth. Ecology 81 (4): 1031 –1045.

Peterson, C.H. 1986. Enhancement of *Mercenaria mercenaria* densities in seagrass beds: Is pattern fixed during settlement season or altered by subsequent differential survival? Limnol. Oceanogr. 31 (1): 200 –205.

Pratt, D.M. 1953. Abundance and growth of *Venus mercenaria* and *Callocardia morrhuana* in relation to the character of bottom sediments. J. Mar. Res. 12: 2 – 17.

Revelas, E.C. 1984. The burrowing behavior of the Hard Clam *Mercenaria mercenaria*. State Univ. NY at Stony Brook M.S. Thesis. 45pp.

Roberts, D., D Rittschof, D.J. Gerhart, A.R. Schmidt, and L.G. Hill. 1989. Verticle migration of the clam *Mercenaria mercenaria* (L.) (Mollusca : Bivalvia): environmental correlates and ecological significance. J. Exp. Mar. Biol. Ecol. 126: 271 – 280.

Sokal, R.R. and F.J. Rohlf. 1995. Biometry: The principles and practice of statistics in biological research. New York, W.H. Freeman and Company.

Sponaugle, S., and P. Lawton. 1990. Portunid crab predation on juvenile hard clams: effects of substrate type and prey density. Mar. Ecol. Prog. Ser. 67: 43 – 53.

Virnstein, R.W. 1977. The importance of predation by crabs and fishes on benthic infauna in Chesapeake Bay. Ecology. 58: 1199 – 1217.

Walker, R.L., and K.R. Tenore. 1984. The distribution and production of the hard clam, *Mercenaria mercenaria*, in Wassaw Sound, Georgia. Estuaries 7: 19 – 27.

Whetstone, J.M., and A.G. Eversole. 1981. Effects of size and temperature on mud crab, *Panopeus herbstii*, predation on hard clams, *Mercenaria mercenaria*. Estuaries 4: 153 – 156.

Wilson, F.S. 1990. Temporal and spatial patterns of settlement: a field study of molluscs in Bogue Sound, North Carolina. J. Exp. Mar. Biol. Ecol. 139: 201 – 220.

Zwarts, L., and J. Wanink. 1989. Siphon size and burying depth in deposit- and suspension-feeding benthic bivalves. Mar. Biol. 100: 227 – 240.